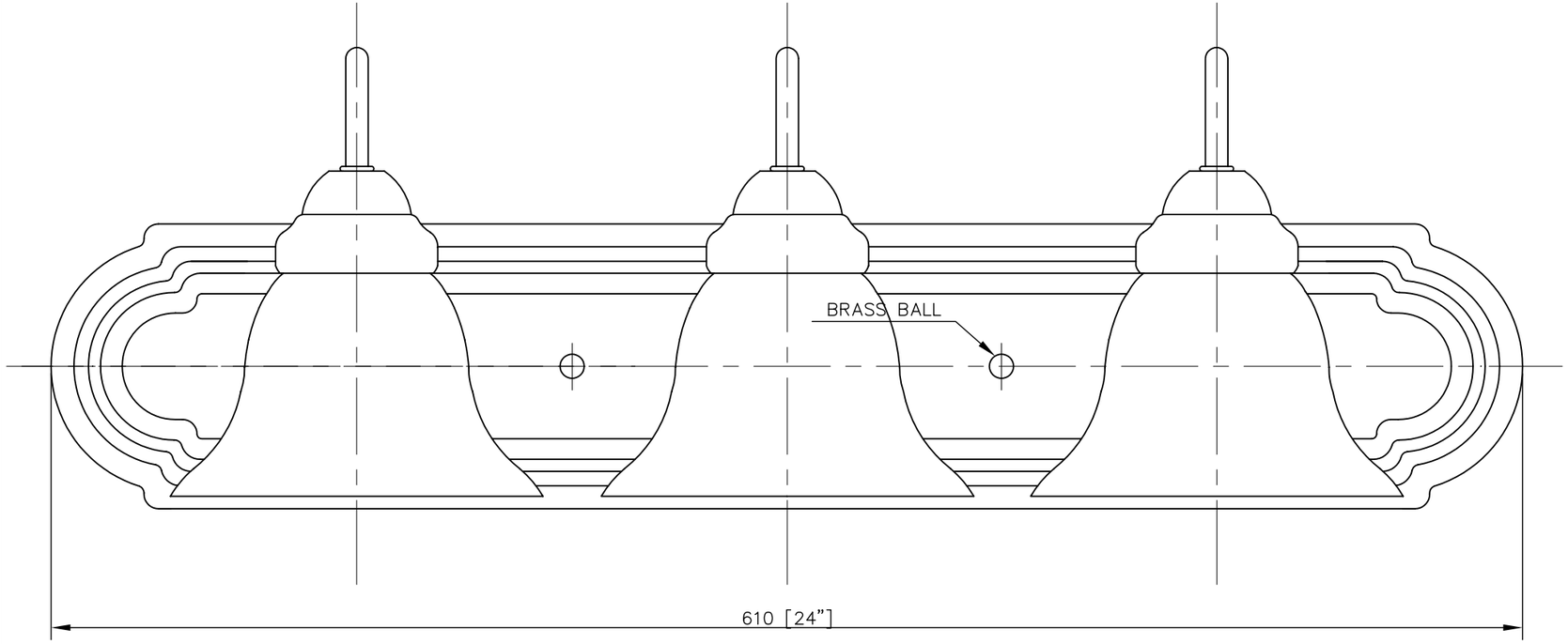
BRASS BALL
610 [24"]

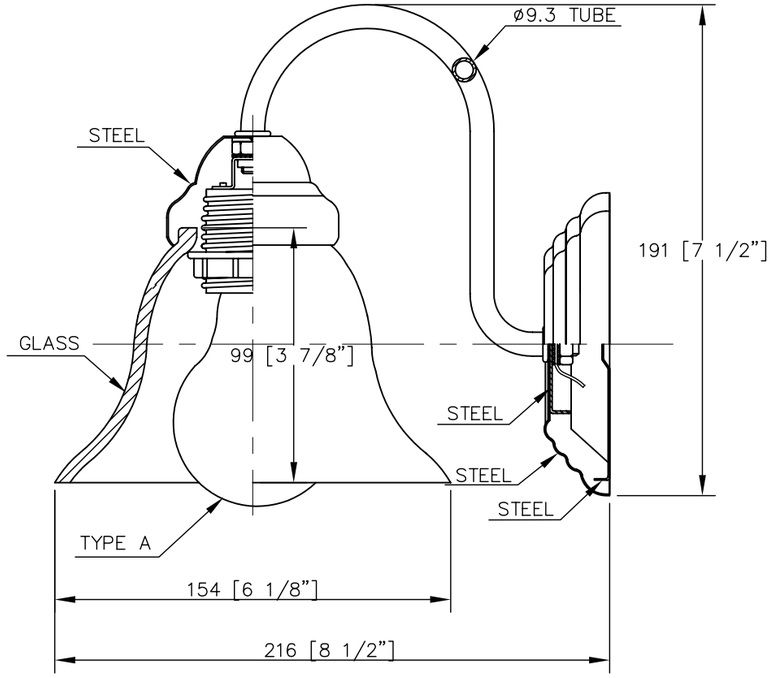
ø9.3 TUBE
STEEL
191 [7 1/2"]
GLASS
99 [3 7/8"]
STEEL
STEEL
STEEL
TYPE A
154 [6 1/8"]
216 [8 1/2"]