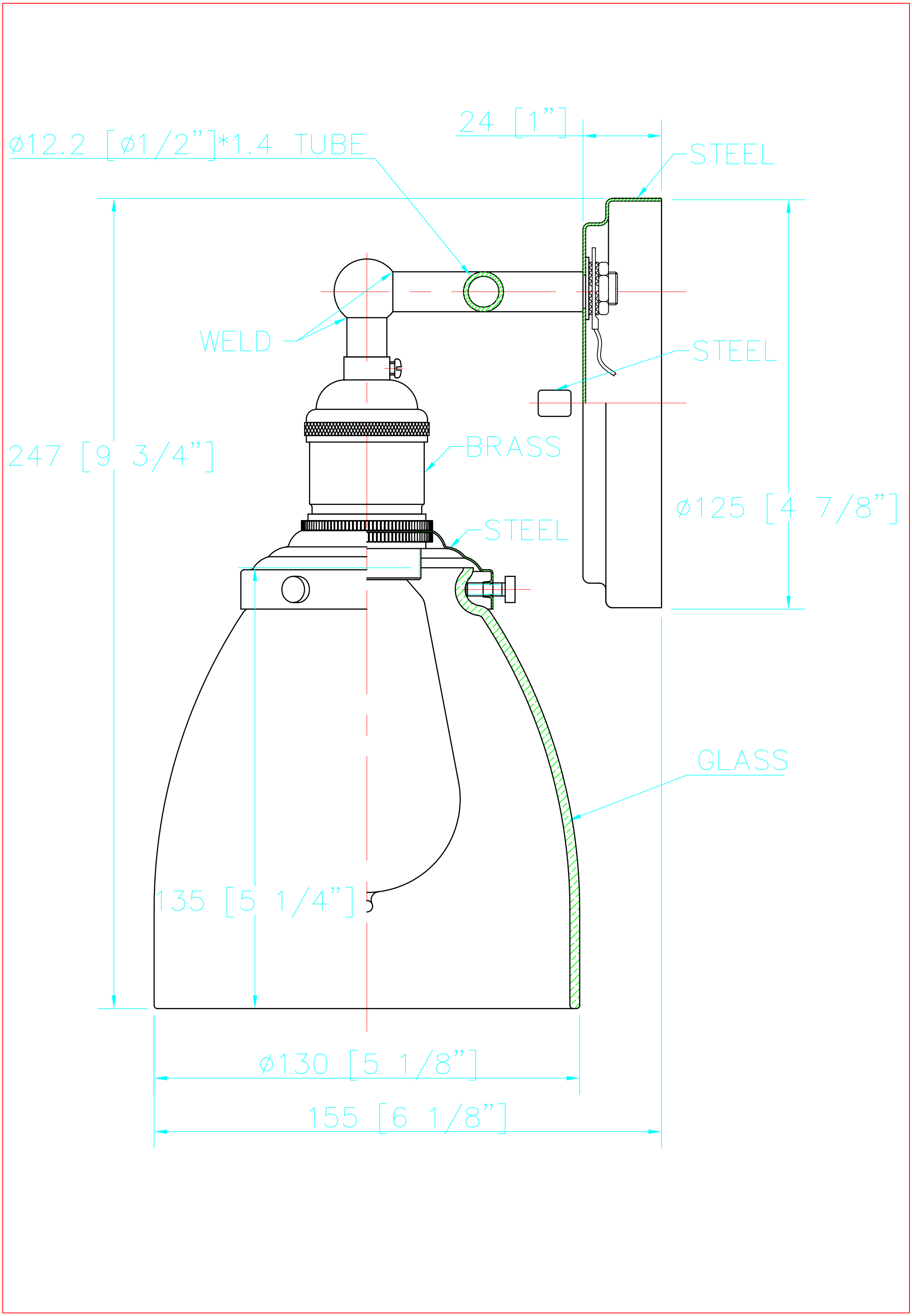
ø12.2 [ø1/2”]*1.4 TUBE
24 [1”]
STEEL
WELD
STEEL
247 [9 3/4”]
BRASS
ø125 [4 7/8”]
STEEL
GLASS
135 [5 1/4”]
ø130 [5 1/8”]
155 [6 1/8”]