FOR ITEM#:60-938/939/937/936

FLUORESCENT WALL MOUNT FIXTURE ASSEMBLY&INSTALLATION INSTRUCTIONS

Please read carefully and save these instructions,as you may need them at a later date.

CAUTION

Turn off the main power at the circuit breaker before installing the fixture,In order to prevent possible shock.Please read carefully and save these instructions , as you may need them at a later date.

GENERAL

All electrical connections must be in accordance with local and national electrical code (N.E.C)standards. If you are unfamiliar with proper electrical wiring connections obtain the services of a qualified electrician. Remove the fixture and the mounting package from the box and make sure that no parts are missing by referencing the illustrations on the installation instruction.

ASSEMBLY AND INSTALLATION

1.Screw off the hand screw(17),take down the cover(2).
2.Pull the supply wire(6)&(9),and the house ground wire(11)out from the outlet box(5).
3.Make the wiring connections : connect the white supply wire(6)to the white fixture wire(7);connect the black supply wire(9)to the black fixture wire(10);using wire connector(8); Put the house ground wire(11)and the fixture ground wire(12)into keyslot of cross bracket ,using green head screw(15)tightly , then carefully tuck all wires back into the outlet box(5).
4.The 5/32 screw(16)and hexa nuts(19)fix on the cross bracket. Place the cross bracket(14)over the outlet box(5)use the 8#-32 thread screw(13), put the mounting screw through the slots on the cross bracket to the outlet box tightly.
5.Place the wall mount(1)over on the cross bracket use nut(18)fix to the PM5/32X25 screw(16)tightly
6.Install the lamp(4)into the socket(3). Do not exceed recommend maximum wattage.
7.Be sure to install ok in the inner, place the cover(2)on the wall mount(1), screw down the hand screws.

INSTALLATION IS NOW COMPLETED

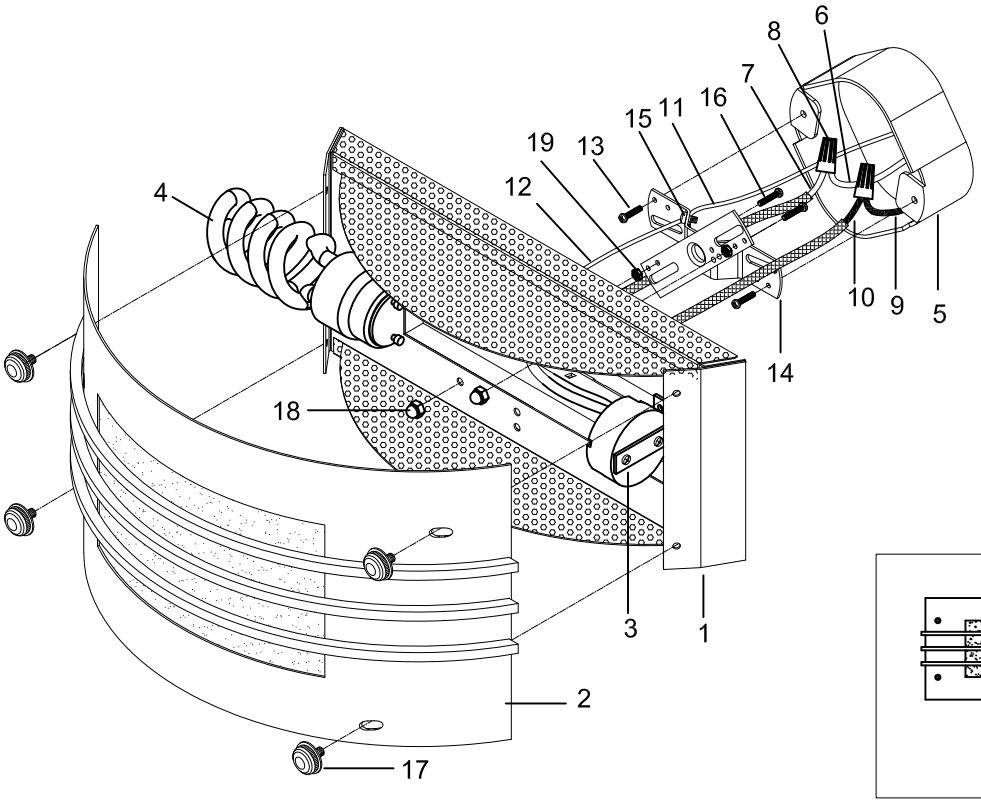
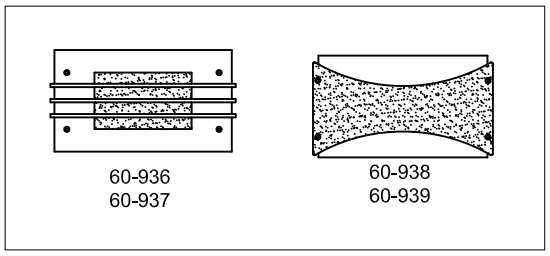
1.WALL MOUNT
2.COVER
3.SOCKET
4.LAMP
5.OUTLET BOX
6.WHITE SUPPLY WIRE
7.WHITE FIXTURE WIRE
8.WIRE CONNECTOR
9.BLACK SUPPLY WIRE
10.BLACK FIXTURE WIRE
11.HOUSE GROUND WIRE
12.FIXTURE GROUND WIRE
13.8#-32 THREAD SCREW
14.CROSS BRACKET
15. GREEN HEAD SCREW
16.5/32 SCREW
17:HAND SCREW
18:CAP NUT
19:HEXA NUT