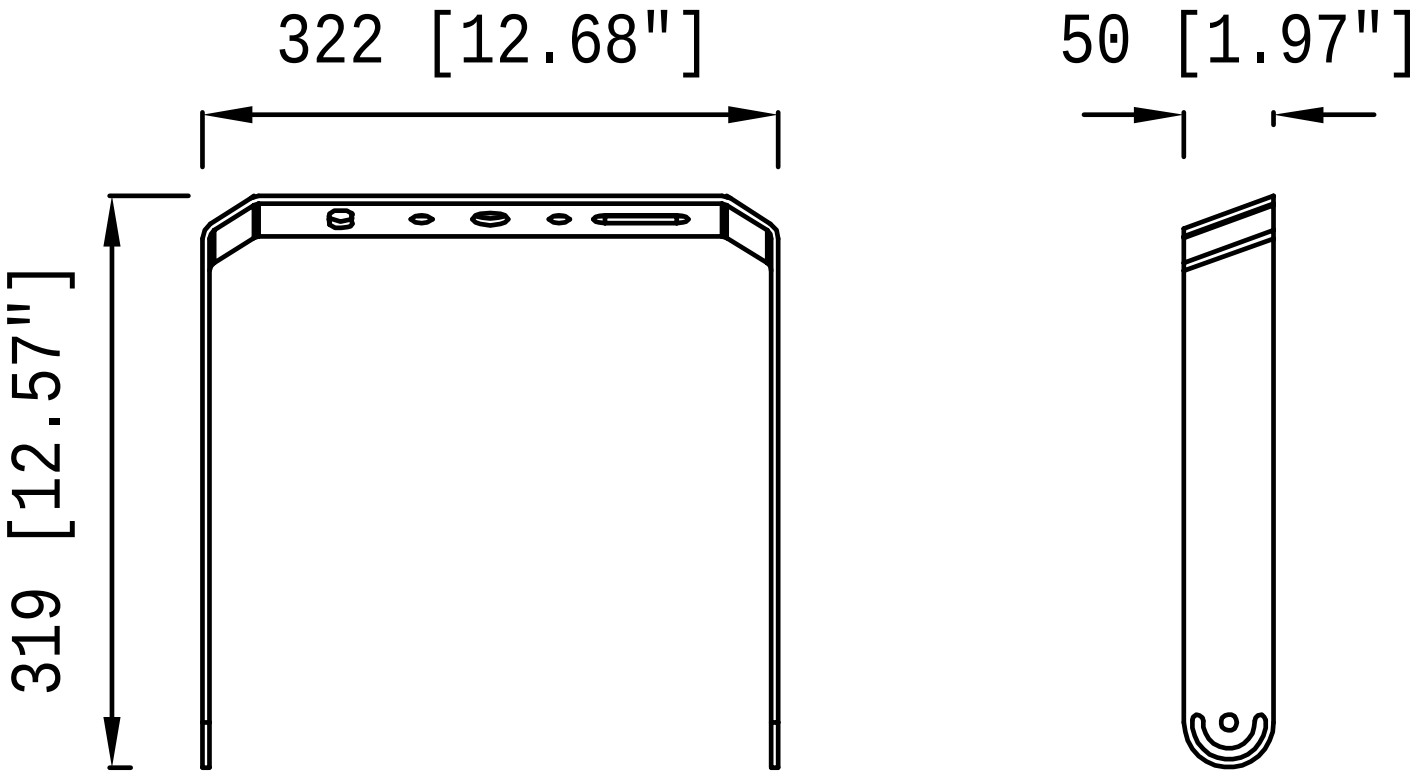

65/874 - 240W/300W