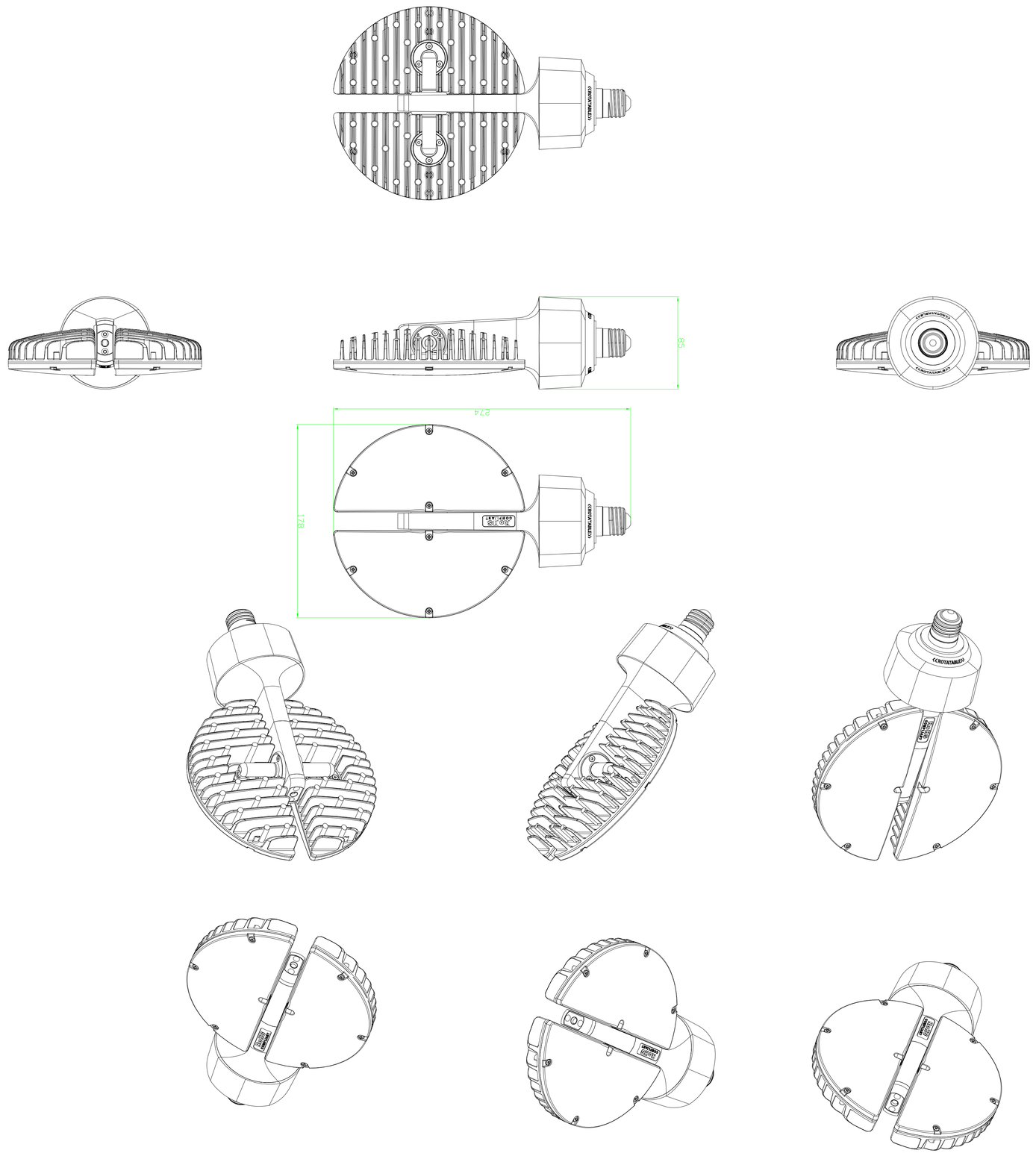


H15-70W-01-E26

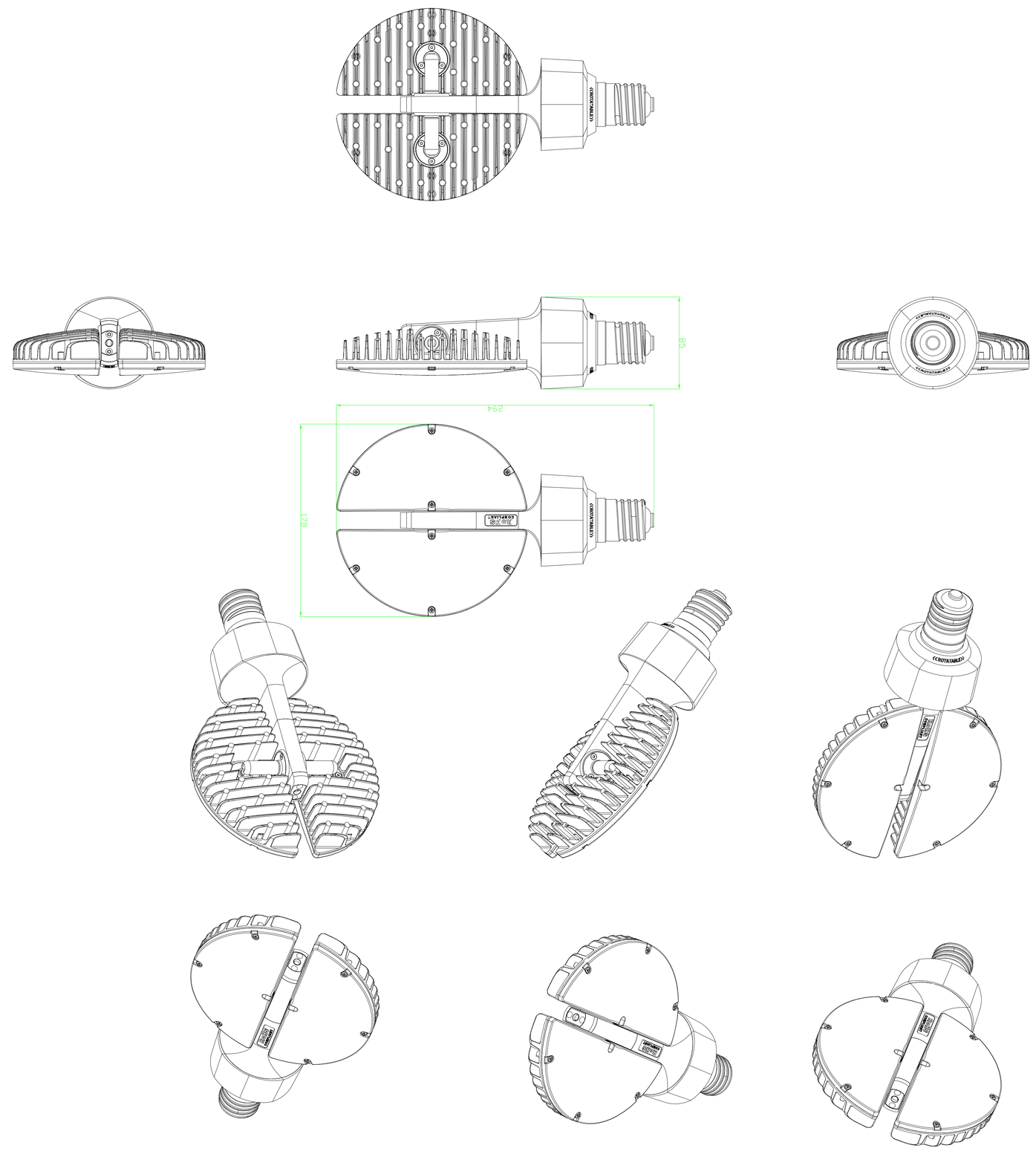


H15-70W-01-E39