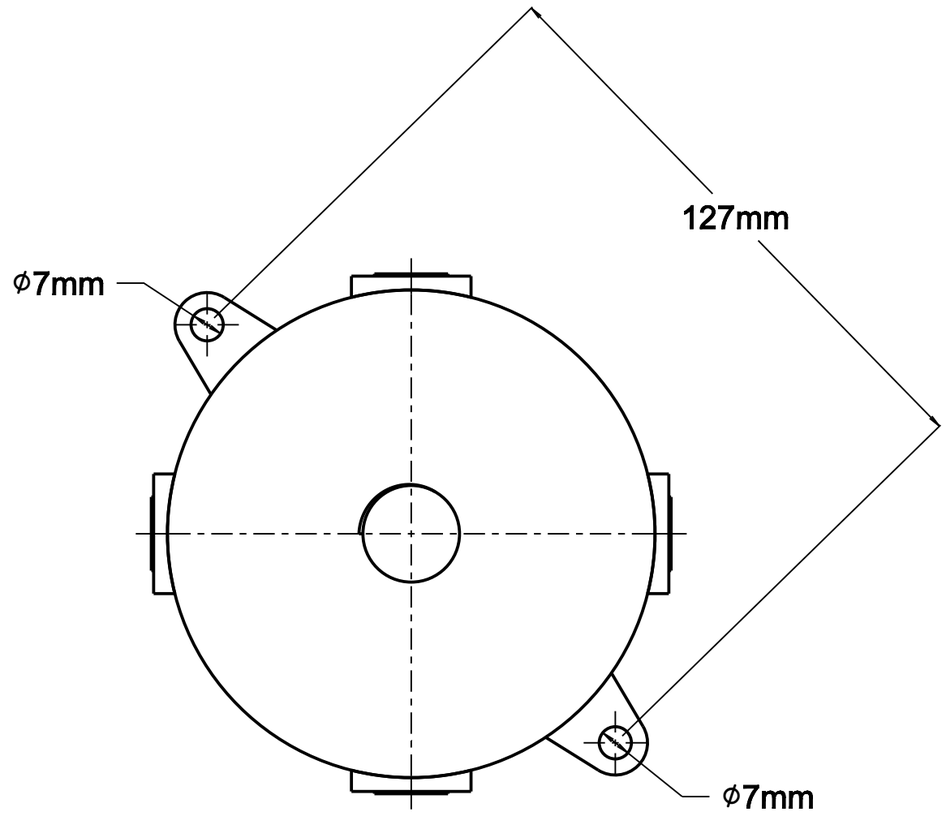

BOTTOM VIEW