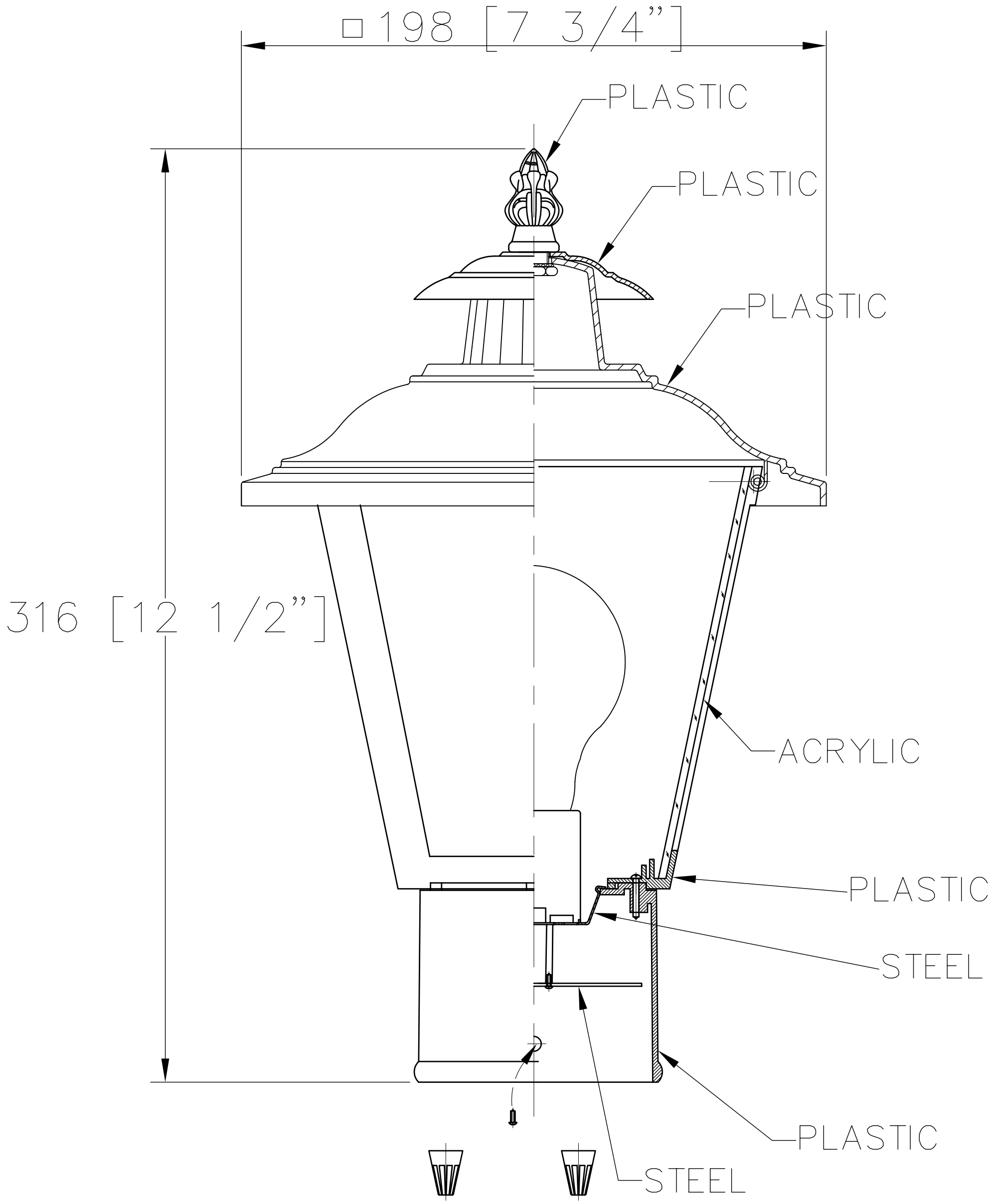
□198 [7 3/4"]
PLASTIC
PLASTIC
PLASTIC
316 [12 1/2"]
ACRYLIC
PLASTIC
STEEL
PLASTIC
STEEL